CANNONDESIGN

SUBMITTAL IDENTIFICATION SHEET

To be completed by Contractor/CM

WEBSTER UNIVERSITY ISB
PROJECT NAME

8274 BIG BEND BLVD
ADDRESS

NUMBER

WEBSTER UNIVERSITY
OWNER

CANNON DESIGN
ARCHITECT / ENGINEER

DEVIN D GATES
SUBMITTED BY

123553-007
CONTRACTOR / CM SUBMITTAL NO.

CANNON DESIGN SUBMITTAL NO.

DRAWING / DETAIL REFERENCE

123553
SPECIFICATION SECTION / PARAGRAPH

MANUFACTURER / SUPPLIER

ITEM / PRODUCT ID

REQUIRED DATE

PRIORITY

☐ CRITICAL

ITEM BEING SUBMITTED (check only one)

- ☐ Shop Drawings
- ☐ Samples (_____ copies)
- ☐ LEED Submittal
- ☐ Certification / Qualifications
- ☐ Record Documents
- ☐ Product Data
- ☐ Coordination Drawing
- ☐ Calculations
- ☐ Schedules
- ☐ O&M Manuals
- ☐ Other _____

ITEM BEING SUBMITTED FOR (check only one)

- ◉ Action
- ☐ Information Only
- ☐ Record

REMARKS OR DEVIATIONS

CONTRACTOR / CM CERTIFICATION
(SUBMITTALS NOT CERTIFIED WILL BE RETURNED WITHOUT REVIEW)

PARIC

PARIC CORPORATION
SUBMITTAL STAMP

THIS SHOP DRAWING HAS BEEN REVIEWED BY PARIC CORPORATION

Subcontractor remains responsible for dimensions, quantities, coordination with other trades and compliance with contract documents.

By:
Devin D. Gates

DEVIN D GATES
REVIEWED BY

1/11/16
DATE

To be completed by Reviewer

05 5000-010 REV002
CANNON DESIGN SUBMITTAL NUMBER

1/12/17
RECEIVED DATE

- ☐ A. No Exceptions Taken
  No further review of submittal is required.
- ◉ B. Make Corrections Noted
  Incorporate corrections in work; resubmission is not required.
- ☐ C. Revise and Resubmit
  Revise as noted, and resubmit for review.
- ☐ D. Rejected
  Submittal is not in compliance with Contract Documents; provide new submittal.
- ☐ E. For Record / Information Only
  Submittal was reviewed for Record / Information purposes only.
- ☐ F. Not Required for Review
  Submittal is not required by Contract Documents and has not been reviewed.

Review is for conformance with the design concept of this project and for general compliance with contract documents. Contractor is responsible for quantities, dimensions and compliance with contract documents and for information that pertains to fabrication processes, construction techniques and coordination of this work with all trades which will be affected thereby. This review is null and void if submittal deviates from contract documents and does not indicate or note deviations.

A/E COMMENTS

☐ See attached sheet(s) for additional comments

GC to coordinate with location of roof hatch.

Move the east wall with door to east as close to the stand pipe as possible considering the required clearances at standpipe. Revise the stair railing at the location accordingly.

Kelvin Patel
REVIEWED BY

Digitally signed by Kelvin Patel
DN: C=US, E=kpatel@cannondesign.com, O=Cannon Design, OU=Architect, CN=Kelvin Patel
Date: 2017.02.09 11:06:58-06'00'

2/9/17
DATE

LAPEYRE STAIR

Item Details for Quote ML-4202

ML-4202-A
Alternating Tread Stair

195" Model C68 Alternating Tread Stair
Stair Angle: 68 Degrees, 85.002" Floor Space
Stair Material: Carbon Steel, Gray Primer
Rails: Optional Straight
Risers: 24 at 8.125" Riser Height
Lead Time: 10 Working Days
Shipping Weights:
Class 85: 356.6 lbs
==========

TO PLACE ORDER - Sign below, sign each stair print, and return to Lapeyre Stair.

IMPORTANT NOTICE:
BY SIGNING BELOW, BUYER ACKNOWLEDGES THAT THE ATTACHED DRAWINGS CONFORM FULLY WITH THEIR PRODUCT REQUIREMENTS. IF THIS IS NOT THE CASE, CONTACT LAPEYRE STAIR IMMEDIATELY.

Approved By: _____ Company: _____ Date: _____
All products will be manufactured as specified in the buyer-approved design prints. Buyer is responsible for field verifications. Please sign and return for final approval of dimensions and parts. Approval releases order for fabrication; quoted lead time commences upon receipt of signed approval prints.

REVISED TO 16'-3" HEIGHT
(LEVEL 4 TO CALCULATED T/ROOF)
AND SUBMITTED FOR RE-APPROVAL.

~ BOTTOM TREAD WILL BE ON
RIGHT-HAND SIDE.

~ GREY PRIMER IS SHERWIN
-WILLAMS EPOXY POWDER
COAT
(DATA SHEETS ATTACHED)

DC/AIW 1/6/17

DO NOT SCALE!

*Top tread to be level with roof or upper floor surface

Meets Federal OSHA Requirements

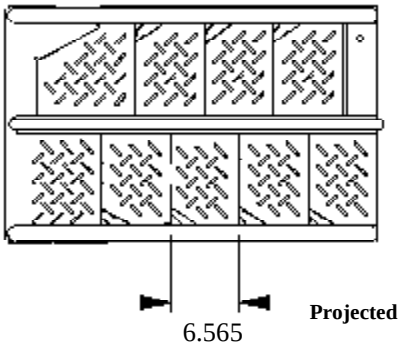

LAPEYRE STAIR, INC
PO Box 50699
New Orleans, LA 70123

Toll Free (800) 535 7631
Local Phone (504) 733 6009
Fax: (504) 733 4393
www.lapeyrestair.com

195.000 inch 68 Degree Carbon Steel, Gray Primer with Optional Straight Handrail

MINIMUM HATCH SIZE 2'6" x 5'6"

GC TO COORDINATE STAIR WIDTH REQUIREMENTS WITH ROOF HATCH OPENING WIDTH.

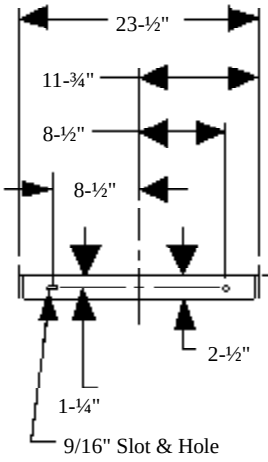

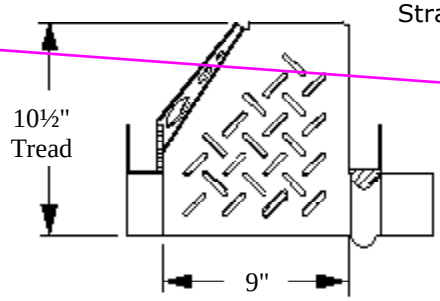

Enlarged Section A-A

INSTALL STAIR AS CLOSE TO THE WALL AS POSSIBLE

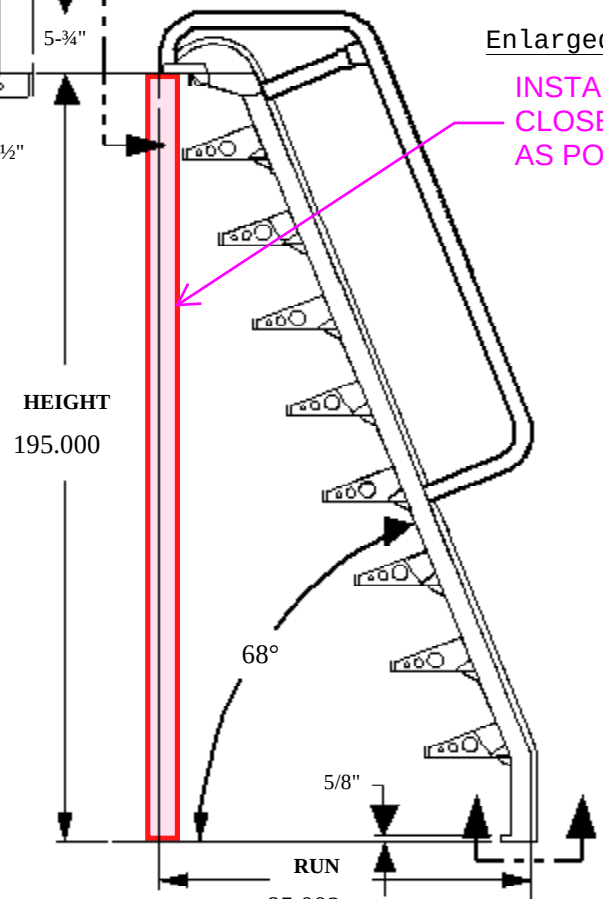

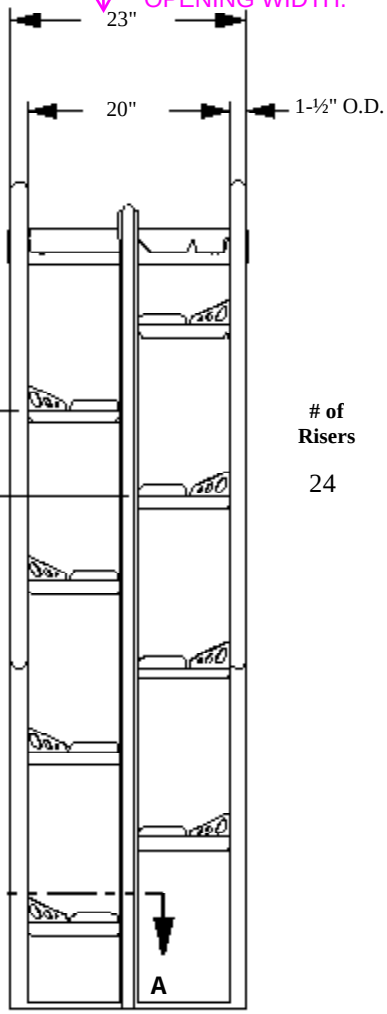

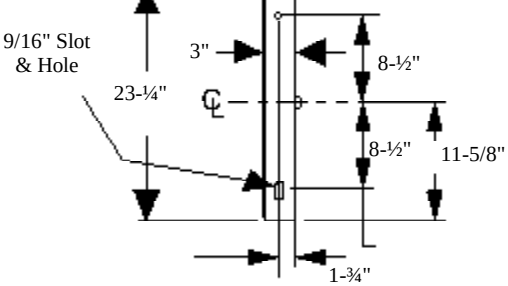

To reduce vibration, stairs in excess of 15' may require customer supplied sway bracing.

For vertical heights in excess of 15', Lapeyre Stair recommends an intermediate platform with two stairs of equal heights.

ATTN: Guy DonCarlos
COMPANY: Atlas Iron Works
ADDRESS: 4020 Geraldine Ave
St Louis, MO 63115
RE: Roof Hatch
DATE: 01/05/2017
ESTIMATED SHIPPING WEIGHT: 356.600
QUOTE/ORDER #: ML-4202

BOTTOM TREAD WILL BE ON RIGHT-HAND SIDE.
DC/AIW 1/6/17

Approved By: _____ Company: _____ Date: _____

All products will be manufactured as specified in the buyer-approved design prints. Buyer is responsible for field verifications. Please sign and return for final approval of dimensions and parts. Approval releases order for fabrication; quoted lead time commences upon receipt of signed approval prints.

MATERIAL SAFETY DATA SHEET

EAS6-C0000
04 00

Section 1 -- PRODUCT AND COMPANY IDENTIFICATION

PRODUCT NUMBER	DATE OF PREPARATION	HMIS CODES	
		Health	3*
EAS6-C0000	23-MAR-08	Flammability	1
		Reactivity	1

PRODUCT NAME
POWDURA® Epoxy Powder Coating, Gray Primer

MANUFACTURER'S NAME
THE SHERWIN-WILLIAMS COMPANY
101 Prospect Avenue N.W.
Cleveland, OH 44115

TELEPHONE NUMBERS and WEBSITES
Regulatory Information
(216) 566-2902
Medical Emergency
(216) 566-2917
Transportation Emergency (800) 424-9300 — for Chemical Emergency ONLY (spill, leak, fire, exposure, or accident)

Section 2 -- COMPOSITION/INFORMATION ON INGREDIENTS

% by WT	CAS No.	INGREDIENT		UNITS	VAPOR PRESSURE
3	936-49-2	Phenylimidazoline			
			ACGIH TLV	Not Available	
			OSHA PEL	Not Available	
18	471-34-1	Calcium Carbonate			
			ACGIH TLV	10 mg/m3 as Dust	
			OSHA PEL	15 mg/m3 Total Dust	
			OSHA PEL	5 mg/m3 Respirable Fraction	
20	13463-67-7	Titanium Dioxide			
			ACGIH TLV	10 mg/m3 as Dust	
			OSHA PEL	10 mg/m3 Total Dust	
			OSHA PEL	5 mg/m3 Respirable Fraction	

Section 3 -- HAZARDS IDENTIFICATION

ROUTES OF EXPOSURE
INHALATION of dust.
EYE or SKIN contact with the product or dust.

EFFECTS OF OVEREXPOSURE
EYES: Irritation.
SKIN: Prolonged or repeated exposure may cause irritation.
INHALATION: Irritation of the upper respiratory system.

SIGNS AND SYMPTOMS OF OVEREXPOSURE
Redness and itching or burning sensation may indicate eye or excessive skin exposure.

MEDICAL CONDITIONS AGGRAVATED BY EXPOSURE
None generally recognized.

Continued on page 2

CANCER INFORMATION
For complete discussion of toxicology data refer to Section 11.

Section 4 -- FIRST AID MEASURES

EYES: Flush eyes with large amounts of water for 15 minutes. Get medical attention.
SKIN: Wash affected area thoroughly with soap and water.
INHALATION: If affected, remove from exposure. Restore breathing. Keep warm and quiet.
INGESTION: Do not induce vomiting. Get medical attention immediately.

Section 5 -- FIRE FIGHTING MEASURES

FLASH POINT	LEL	UEL
Not Applicable	N.A.	N.A.

FLAMMABILITY CLASSIFICATION
Not Applicable
EXTINGUISHING MEDIA
Carbon Dioxide, Dry Chemical, Foam
UNUSUAL FIRE AND EXPLOSION HAZARDS
Dust at sufficient concentrations can form explosive mixtures with air.
During emergency conditions overexposure to decomposition products may cause a health hazard. Symptoms may not be immediately apparent. Obtain medical attention.
SPECIAL FIRE FIGHTING PROCEDURES
Full protective equipment including self-contained breathing apparatus should be used.
Water spray may be ineffective. If water is used, fog nozzles are preferable. Water may be used to cool closed containers to prevent pressure build-up and possible autoignition or explosion when exposed to extreme heat.

Section 6 -- ACCIDENTAL RELEASE MEASURES

STEPS TO BE TAKEN IN CASE MATERIAL IS RELEASED OR SPILLED
Remove all sources of ignition.
Sweep up material taking care not to generate airborne dust.

Section 7 -- HANDLING AND STORAGE

STORAGE CATEGORY
Not Applicable
PRECAUTIONS TO BE TAKEN IN HANDLING AND STORAGE
Store in a cool, dry area out of direct sunlight.
Keep container closed when not in use. Transfer only to approved containers with complete and appropriate labeling. Do not take internally. Keep out of the reach of children.

Continued on page 3

Section 8 -- EXPOSURE CONTROLS/PERSONAL PROTECTION

PRECAUTIONS TO BE TAKEN IN USE

Use only with adequate ventilation.

Avoid eye and prolonged skin contact. Avoid generating or breathing airborne dust.

Wash hands after using.

This coating may contain materials classified as nuisance particulates (listed "as Dust" in Section 2) which may be present at hazardous levels only during sanding or abrading of the dried film. If no specific dusts are listed in Section 2, the applicable limits for nuisance dusts are ACGIH TLV 10 mg/m3 (total dust), 3 mg/m3 (respirable fraction), OSHA PEL 15 mg/m3 (total dust), 5 mg/m3 (respirable fraction).

VENTILATION

Local exhaust preferable. General exhaust acceptable if the exposure to materials in Section 2 is maintained below applicable exposure limits. Refer to OSHA Standards 1910.94, 1910.107, 1910.108.

RESPIRATORY PROTECTION

If personal exposure cannot be controlled below applicable limits by ventilation, wear a properly fitted organic vapor/particulate respirator approved by NIOSH/MSHA for protection against materials in Section 2.

When sanding or abrading the dried film, wear a dust/mist respirator approved by NIOSH/MSHA for dust which may be generated from this product, underlying paint, or the abrasive.

PROTECTIVE GLOVES

Required for long or repeated contact.

EYE PROTECTION

Wear safety spectacles with unperforated sideshields.

Section 9 -- PHYSICAL AND CHEMICAL PROPERTIES

PRODUCT WEIGHT	13.03 lb/gal	1561 g/l
SPECIFIC GRAVITY	1.57	
BOILING POINT	Not Applicable	
MELTING POINT	Not Available	
VOLATILE VOLUME	0 %	
EVAPORATION RATE	N.A.	
VAPOR DENSITY	N.A.	
SOLUBILITY IN WATER	N.A.	

VOLATILE ORGANIC COMPOUNDS (VOC Theoretical - As Packaged)

0.00 lb/gal	0 g/l	Less Water and Federally Exempt Solvents
0.00 lb/gal	0 g/l	Emitted VOC

Section 10 -- STABILITY AND REACTIVITY

STABILITY -- Stable

CONDITIONS TO AVOID

High concentrations of airborne dust which may ignite explosively.

INCOMPATIBILITY

Strong oxidizers, acids or alkalies.

HAZARDOUS DECOMPOSITION PRODUCTS

By fire: Carbon Dioxide, Carbon Monoxide

HAZARDOUS POLYMERIZATION

Will not occur

Continued on page 4

Section 11 -- TOXICOLOGICAL INFORMATION

CHRONIC HEALTH HAZARDS

IARC's Monograph No. 93 reports there is sufficient evidence of carcinogenicity in experimental rats exposed to titanium dioxide but inadequate evidence for carcinogenicity in humans and has assigned a Group 2B rating. In addition, the IARC summary concludes, "No significant exposure to titanium dioxide is thought to occur during the use of products in which titanium is bound to other materials, such as paint."

TOXICOLOGY DATA

CAS No.	Ingredient Name				
936-49-2	Phenylimidazoline				
		LC50	RAT	4HR	Not Available
		LD50	RAT		314 mg/kg
471-34-1	Calcium Carbonate				
		LC50	RAT	4HR	Not Available
		LD50	RAT		Not Available
13463-67-7	Titanium Dioxide				
		LC50	RAT	4HR	Not Available
		LD50	RAT		Not Available

Section 12 -- ECOLOGICAL INFORMATION

ECOTOXICOLOGICAL INFORMATION

No data available.

Section 13 -- DISPOSAL CONSIDERATIONS

WASTE DISPOSAL METHOD

Waste from this product is not hazardous as defined under the Resource Conservation and Recovery Act (RCRA) 40 CFR 261.

Incinerate in approved facility. Do not incinerate closed container. Dispose of in accordance with Federal, State/Provincial, and Local regulations regarding pollution.

Section 14 -- TRANSPORT INFORMATION

US Ground (DOT)

Not Regulated for Transportation.

Canada (TDG)

Not Regulated for Transportation.

IMO

Not Regulated for Transportation.

Continued on page 5

Section 15 -- REGULATORY INFORMATION

SARA 313 (40 CFR 372.65C) SUPPLIER NOTIFICATION

CAS No.	CHEMICAL/COMPOUND	% by WT	% Element

No ingredients in this product are subject to SARA 313 (40 CFR 372.65C) Supplier Notification.

CALIFORNIA PROPOSITION 65

WARNING: This product contains chemicals known to the State of California to cause cancer and birth defects or other reproductive harm.

TSCA CERTIFICATION

All chemicals in this product are listed, or are exempt from listing, on the TSCA Inventory.

Section 16 -- OTHER INFORMATION

This product has been classified in accordance with the hazard criteria of the Canadian Controlled Products Regulations (CPR) and the MSDS contains all of the information required by the CPR.

The above information pertains to this product as currently formulated, and is based on the information available at this time. Addition of reducers or other additives to this product may substantially alter the composition and hazards of the product. Since conditions of use are outside our control, we make no warranties, express or implied, and assume no liability in connection with any use of this information.

TECHNICAL INFORMATION

POWDURA® EPOXY POWDER COATING

CHEMICAL COATINGS

PRODUCT DESCRIPTION

EAS6C0000 GRAY PRIMER

POWDURA® Epoxy Powder Coating is recommended for a broad range of interior functional and decorative applications. EAS6C0000 is also suitable for exterior applications when top-coated with an opaque coating. EAS6C0000, when applied to properly pretreated substrate and top-coated with certain weatherable coatings, has shown performance to exceed 5000 hours salt fog.*****

Performance Tests:

Adhesion:
(ASTM D-3359) No failure with 1/16 " Squares

Flexibility: Pass 1/8 " Mandrel Bend
(ASTM D-522)

Pencil Hardness: 2H
(ASTM D-3363)

Impact Resistance: 80 Dir/ 80 Rev
(ASTM D-2794)

CHARACTERISTICS

60° Gloss: 55-65

Cure Schedule: 10 min. at 400°F

Film Thickness Range: 1.8 – 3.0 mils

Specific Gravity: 1.57± .05

Coverage at 1.0 Mil 122.4 sq. ft./ lb**.**

Typical Environmental Properties:
On Bonderite 1000 Panels

Salt Fog 1000 hours
(ASTM B-117)

Salt Fog (top-coated)* 5000+ hours
(ASTM B-117)

Humidity 1000 hours
(ASTM D-4585)

Storage:
Powdura® Epoxy Powder Coatings should be kept in a dry and cool area at temperatures below 75°F (24° C). Shelf life ranges from 6 months to over 1 year. When not in use, store powder in sealed containers: fine powders are hygroscopic.

SPECIFICATIONS

General: Substrate should be free of grease, oil, dirt, fingerprints, drawing compounds, any contamination, and surface preparation treatments to ensure optimum adhesion and coating performance properties. The use of a chemical conversion coating prior to the application of a powder coating is strongly recommended. Consult Metal Preparation Brochure CC-T1 for additional details.

Aluminum: A minimum of a 5-stage chrome phosphate metal treatment, or equivalent, is required for good adhesion and optimum coating performance properties.

Testing: Due to the wide variety of substrates, surface preparation methods, application methods, and environments, the customer should test the complete system for adhesion and compatibility prior to full-scale application.

Product Limitations:.

- Contact your Sherwin-Williams Representative where use of this product at higher than recommended film thickness may be required.

APPLICATION

Powder coatings must be applied using suitable electrostatic equipment. Consult your Sherwin-Williams Representative regarding unique applications.

CAUTIONS

Thoroughly review product label for safety and cautions prior to using this product. Please direct any questions or comments to your local Sherwin-Williams facility.

CAUTION! Causes eye irritation, causes skin irritation, may cause allergic skin reaction, respiratory irritant, dust may cause eye and respiratory irritation, dust may form an explosive mixture in air. Avoid breathing dust. Avoid contact with eyes and prolonged or repeated contact with skin. Use protective clothing and NIOSH approved respirator. Do not use near sparks or open flame or any type of ignition source. Wash thoroughly after handling. Use only with adequate ventilation.

FIRST AID:
If on SKIN: Wash thoroughly with soap and water.
If in EYES: Flush with water immediately and procure medical attention. The area adjacent to the coating operation should be properly ventilated. Cure ovens must be exhausted to the outside atmosphere. All dusts are respiratory irritants, inhalation of the dust should be avoided. To avoid static electricity build-up, properly ground all equipment. Provide dust collection equipment with adequate explosion venting; dust clouds of any finely divided organic material can be ignited by open flame or electrical sparks.

DO NOT TAKE INTERNALLY.

KEEP OUT OF REACH OF CHILDREN.

FOR INDUSTRIAL USE ONLY.

REFER TO MATERIAL SAFETY DATA SHEET FOR ADDITIONAL INFORMATION.

Note:
Product Data Sheets are periodically updated to reflect new information relating to the product. It is important that the customer obtain the most recent Product Data Sheet for the product being used. The information, rating and opinions stated above pertain to the material currently offered and represent the results of tests believed to be reliable. However, due to variations in customer handling and methods of application which are not known or under our control, The Sherwin-Williams Company cannot make any warranties or guaranties as to the end results.

Rockford, IL
DATE June 28, 2005

Gates, Devin

From: Guy Don Carlos <guy@atlasironworks.com>
Sent: Friday, January 06, 2017 9:49 AM
To: Gates, Devin
Cc: Szachnieski, Jason; Jenn (AIW); Ryan (AIW)
Subject: A16013M - Webster ISB - Alternating Tread Stair for Re-Approval
Attachments: EAS6-C0000_MSDS_English_Gray Primer.pdf; EAS6-C0000_PDS_English_Gray Primer.pdf; ML-4202 (16'-3'' LaPeyre Alt Trd Stair) (1-6-17).pdf; STEEL!OPTIONAL_STRAIGHT!68! 16ft_3_and_ZERO_in!stair.TIF

Follow Up Flag: Follow up
Flag Status: Flagged

Devin,

Attached, please find revised drawings for the LaPeyre Alternating Tread Stair submitted for re-approval.

Comments (based on OEM comments below and prior review comments):

- Based on the revised height of the stair (16'-3", or 195"), the bottom tread will be on the right-hand side (per first review comments).
    - This is depicted incorrectly in the attached quotation sketch, but is correct per the vendor below and the attached TIF file from their 'model generator' – link below.

- LaPeyre (specified manufacturer per 055000-2.12-1-a) uses a Sherwin-Williams epoxy powder coat primer, data sheets attached. Please ask the design team to verify this will be acceptable, as they specified the OEM.

- The lateral 'run' for this stair will be approximately 7'-1" (85"). The first review comments read "… *to fit within the room.*" As there are no dimensions locating the walls of this room (4/A0502), Atlas cannot verify that this re-submitted, 68 degree ladder will '… *fit within the room.'* and still allow access to the ladder.
    - Using the Adobe measuring tool on 4/A0502; it appears that the walls are approximately 8'-11" to 9'-0" apart, which seems to limit the access to the bottom of the stair - but this is a design team issue.

- Per the approval comment on page 4 of 4 of the prior submittal; Paric needs to please verify the minimum roof hatch size of 2'-6" wide by 5'-6". This is LaPeyre's 'minimum hatch size for this 68 degree ladder

Please return one copy approved, or with comments noted, by 1/20/17.

THX!

Guy/ATLAS
314-383-7200

From: Michael.Lane@Lapeyrestair.com [mailto:Michael.Lane@Lapeyrestair.com]
Sent: Thursday, January 05, 2017 3:19 PM
To: guy@atlasironworks.com
Subject: RE: Alternating Tread Stair - Approval Prints Request - Bottom Tread & Primer?

Good afternoon Guy,

Please see answers to your questions below:

1) Our stairs are pre-engineered based on height and angle; the tread layout is determined by these two factors. Luckily for the 195" the tread will be on the right side, but if the stair were to change in height or angle it may be on the left. Easiest way to check would be to use our .dwg model generator on our site, which will show tread layout:

   https://www.lapeyrestair.com/alternating-tread-stair/model

2) Our gray primer is an epoxy powder coated primer. Have attached spec information and data sheet for you here. We are able to use any paint or primer that you spec, as long as it is powder-coated. Otherwise we do offer a mill finish as well.

Please let me know if you have any questions, or if I can help with any additional information.

Thanks-

Michael Lane
Lapeyre Stair
(P)800-535-7631
(F)504-733-4393
email: ls.sales@lapeyrestair.com
LAPEYRE STAIR

From: Guy Don Carlos [mailto:guy@atlasironworks.com]
Sent: Thursday, January 05, 2017 3:06 PM
To: Michael Lane <Michael.Lane@Lapeyrestair.com>
Subject: RE: Alternating Tread Stair - Approval Prints Request - Bottom Tread & Primer?

Michael,

1) Any problem the bottom tread being on the right-hand side as you start up the ladder? This is a request of the architect's.

2) Is the 'grey primer' a 'zinc-rich' primer? If not, can LaPere provide zinc-rich primer?

Guy/ATLAS
314-383-7200

From: Michael.Lane@Lapeyrestair.com [mailto:Michael.Lane@Lapeyrestair.com]
Sent: Thursday, January 05, 2017 2:48 PM
To: Guy@AtlasIronWorks.com
Subject: FW: Alternating Tread Stair - Approval Prints Request

Good afternoon Guy,

Please find the attached quote and print for (1) 195" Carbon Steel Alternating Tread Stair. Let me know if you have any questions, or if we can help provide any additional information.

Thanks-

Michael Lane
Lapeyre Stair
(P)800-535-7631
(F)504-733-4393
email: ls.sales@lapeyrestair.com
LAPEYRE STAIR

From: ls.sales@lapeyrestair.com [mailto:ls.sales@lapeyrestair.com]
Sent: Thursday, January 05, 2017 2:29 PM
To: ls.sales <ls.sales@laitram.com>
Subject: Alternating Tread Stair - Approval Prints Request

ROOF HATCH INCLUDED FOR COORDINATION ONLY.

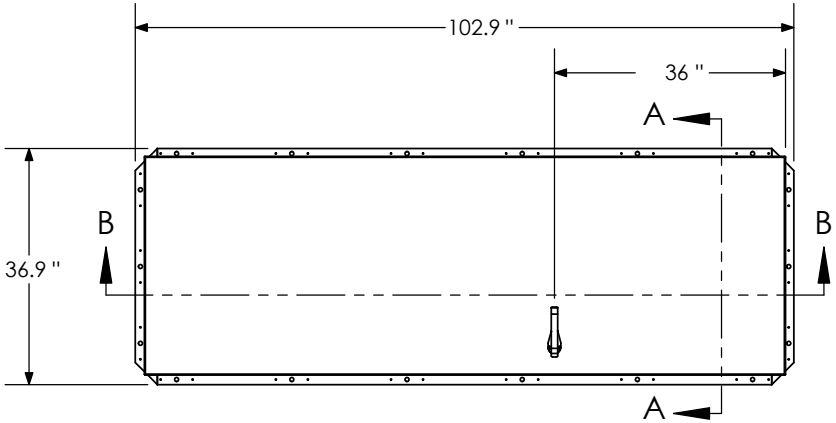

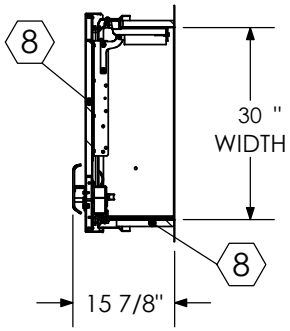

SECTION A-A

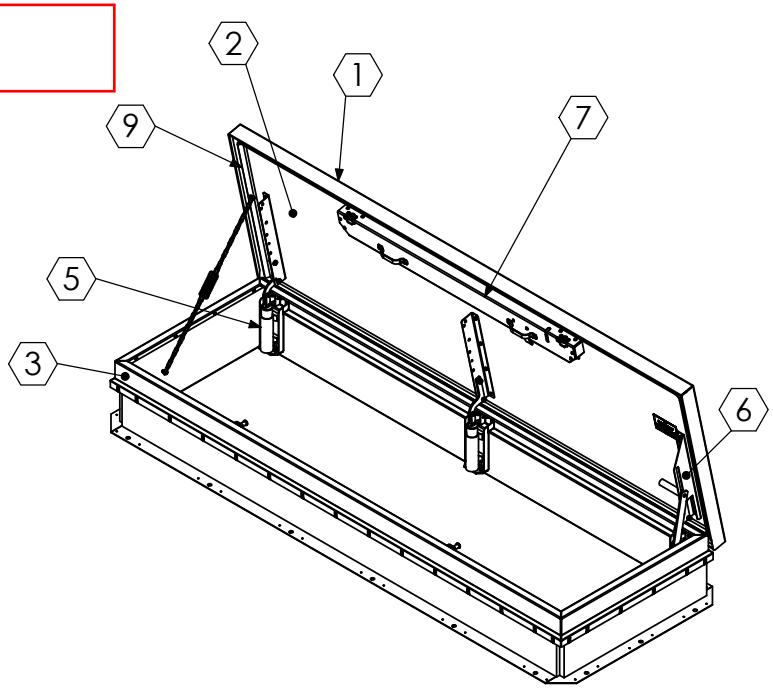

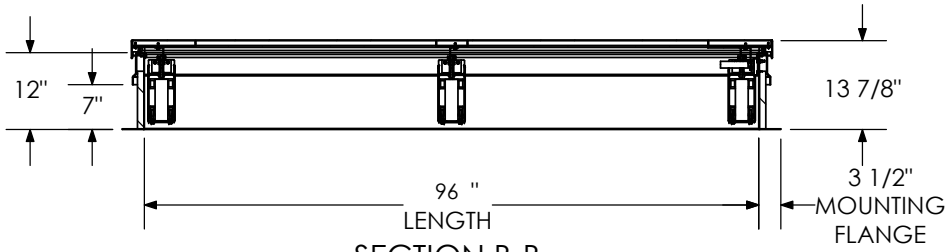

SECTION B-B

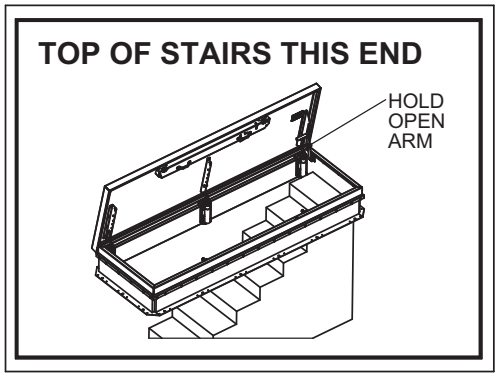

SPECIFICATIONS:

(1) COVER: 11 GA ALUM COVER STIFFENED TO WITHSTAND A LIVE LOAD OF 40PSF WITH A MAX DEFLECTION OF 1/150 OF THE SPAN

(2) LINER: 18 GA ALUM

(3) CURB AND COUNTERFLASH W/ EZ TAB: 11 GA ALUM

4 FINISH: MILL FINISH

(5) SPRING/HINGE ASSEMBLY: ZINC PLATED STEEL TAMPER-PROOF HINGE CONTAINED WITHIN SPRING/HINGE ASSEMBLY. TELESCOPIC TUBES CONTAIN COIL STEEL COMPRESSION SPRINGS FOR LIFT ASSISTANCE

(6) HOLD OPEN ARM: LOCKS COVER IN FULLY OPEN POSITION - ZINC PLATED STEEL WITH RED VINYL GRIP HANDLE PULL RELEASE

(7) LATCH: 2 POINT ROTARY LATCH SLAM LATCH HOLDS COVER CLOSED AGAINST 90 PSF WIND UPLIFT. INTERNAL AND EXTERNAL TURN HANDLES WITH PADLOCK HASPS

(8) INSULATION: 1" POLYSTYRENE (R4) IN COVER, AND 1" FIBERBOARD (R2.8) IN CURB

(9) GASKET: ADHESIVE BACKED EPDM RUBBER EXTRUSION

10 SIZING: WIDTH X LENGTH DIMENSIONS ARE MEASURED INSIDE CURB TO INSIDE CURB WHERE THE WIDTH IS HINGE TO LATCH AND LENGTH IS HINGED SIDE WITH SPRINGS

DOUBLE WALL CURB? YES ☒ NO ☐

ROOF HATCH SIZE 30 " (WIDTH) x 96 " (LENGTH)

CLEAR OPENING 45348 " (WIDTH) x 94.25 " (LENGTH)

ROUGH OPENING 30 " (WIDTH) x 96 " (LENGTH)

PROJECT:	Webster University				
ARCHITECT:	Cannon				
CONTRACTOR:	Paric-GC/ Vogel-Sub				
QTY:	1				
PART#:	RHPA30X96S2T				
NYSTROM Right to site. 9300 73rd Avenue North Brooklyn Park, MN 55428	TITLE: Roof Hatch, Personnel Series, Sngl Dr, Zinc Hdw, Alum Curb and Cover, Mill Finish, Dbl Wall Curb,				
	NAME	DATE	SIZE	DWG. NO.	REV
DRAWN	ELW	9/10/12	A	RHPA_X_S_T-2PT	A
RELEASED	-	-	WEIGHT: VARIES		SHEET 1 OF 2

PROPRIETARY AND CONFIDENTIAL: THE INFORMATION CONTAINED IN THIS DRAWING IS THE SOLE PROPERTY OF NYSTROM. ANY REPRODUCTION IN PART OR AS A WHOLE WITHOUT THE WRITTEN PERMISSION OF NYSTROM IS PROHIBITED.